Atijera, Evamarie (CPC) 3 LOD'S WITHDRAWN

From: Lindsay, Ashley (CPC)
Sent: Thursday, July 06, 2017 1:01 PM
To: Tony Phillips
Cc: Matthew Nickel; Steve Barich; Atijera, Evamarie (CPC)
Subject: RE: Request to Withdraw Comcast LOD's - San Francisco

Hi Tony,

No worries, thank you for the withdrawal confirmation.

Kind regards,

Ashley Lindsay
Current Planning + Wireless Specialist
Planning Department, City and County of San Francisco
1650 Mission Street, Suite 400, San Francisco, CA 94103
Email: Ashley.Lindsay@sfgov.org **Direct:** 415-575-9178

From: Tony Phillips [mailto:Tony.Phillips@sacw.com]
Sent: Thursday, July 06, 2017 11:25 AM
To: Lindsay, Ashley (CPC)
Cc: Matthew Nickel; Steve Barich
Subject: Request to Withdraw Comcast LOD's - San Francisco

Good Afternoon Ashley-

I apologize for not getting back to you on this sooner. I was waiting for our client to "Officially" approve the withdrawal.
Please let this e-mail serve as our request to withdraw the (3) LOD applications listed below.

Thanks again for all your help.

- 1900 Market Street – R # 2017-007829 ZAD
- 2001 Van Ness – R # 2017-007830 ZAD
- 2599 San Bruno. – R # 2017-007832 ZAD

Tony Phillips

Tony Phillips | Zoning & Permitting | Mobile: 847-331-3659
SAC Wireless | 540 W. Madison, 17th Floor, Chicago, IL 60661
tony.phillips@sacw.com

From: Lindsay, Ashley (CPC) [mailto:ashley.lindsay@sfgov.org]
Sent: Thursday, July 06, 2017 11:34 AM
To: Tony Phillips <Tony.Phillips@sacw.com>
Subject: Request to Withdraw LODs

Good morning Tony,

SAC WIRELESS

R # 2017-007830ZAD
CK # 60904 $ 664.-
A. LINDSAY (WIRELESS)

June 12, 2017

Mr. Scott Sanchez
Zoning Administrator
San Francisco Planning Department
1650 Mission Street, Suite 400
San Francisco, CA 94103

RE: Letter of Determination Request – Comcast Machine Q – 2001 Van Ness Ave.
(0594/002)

Dear Mr. Sanchez;

My firm is representing Comcast for the Leasing, Permitting and Installation of their latest technology called Machine Q. Machine Q is a low power network that is part of the Internet of Things (IoT). From Smart Communities and Infrastructure where Utilities, Waste Management, Temperature and Lighting can be monitored, to Transportation and Logistics. Machine Q is a flexible cost-effective solution suitable for a wide range of applications targeted towards Municipalities and Utilities.

We are currently seeking approval for the installation of Machine Q antennas on the existing Billboard at **2001 Van Ness Ave. - Block 0594 Lot 002 – Planning District 2 – Zoning RC-4.**

The installation consists of 2 – 28" Omni Antennas, an 8" LTE Antenna, a 3" GPS antenna and a small Gateway Unit. This is all powered by a Unit Called PoE (Power over Ethernet). The Total weight of these items without mounting brackets is less than 12lbs. There will be no ground disturbance and minimal visual Impact. I've attached a copy of the proposed drawings, photo simulations, and spec sheets.

Hard copies of these documents along with a check for $664.00 will be overnighted to your department.

We greatly appreciate you taking the time to review our request. I can be reached at 847-331-3659 should you have any questions.

Best Regards,

Tony Phillips
Zoning & Permitting Lead
SAC Wireless for Comcast
540 W. Madison – 17th Floor
Chicago, IL 60661
847-331-3659
tony.phillips@sacw.com

KONA Macro IoT Gateway

High Capacity LoRaWAN Gateway for Widea Area Deployments

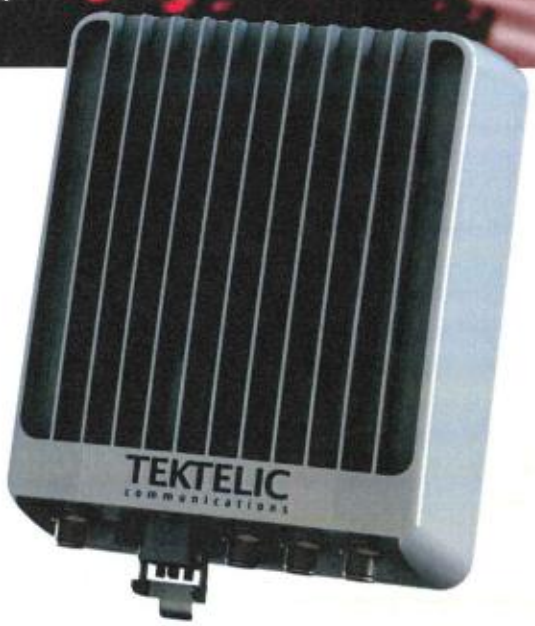

TEKTELIC's KONA Macro IoT Gateway provides network operators with a carrier grade product for the deployment of LoRaWAN Internet of Things networks. The Gateway enables massive scalability in a compact form factor by supporting up to 12 million messages per day.

It is ideal for public and private network operators that require Full Duplex, mulitiple Rx and Tx Channels, cost effective and reliable LoRaWAN gateways to maximise their network investment for years to come.

Product Differentiators:

- High availability carrier grade design with support of in-service configuration and software updates.
- Environmentally hardended aluminum enclosure fully tested to withstand extreme temperature conditions.
- Full duplex operation making all receive and transmit channels availabe simultaniously.
- Excellent isolation between the Tx and Rx bands as well as out of band rejection of Cellular and Paging networks.
- Day-One scalability with support of up to 12 million received messages per day.
- Easy to deploy supporting different backhaul and power options.
- Fully integrated with the broader eco-system of LoRa™ network servers and sensors.

Key Features

NA, EU and other ISM Bands
Full Duplex 72 Rx and 4 Tx Channels (NA)
Up to 12 million messages per day
Precise Network Synchronization (GPS)
Localization Support
1 Watt (30 dBm) Tx Power
Hardened Carrier Grade Enclosure
Backhaul Connectivity (ETH / 3G / 4G)

TEKTELIC
communications

WWW.TEKTELIC.COM +1.403.338.6900 INFO@TEKTELIC.COM

KONA Macro IoT Gateway

High Capacity LoRaWAN Gateway for Widea Area Deployments

Technical and Functional System Specifications

Mechanical Parameters

MTBF	15 years
DC POwer Consumption	< 40 W (POE++)
Operational Temperature	-40°C to +55°C
Operational Humidity	10% to 100% Condensing
Ingress Protection	IP67
Size	222 x 265 x 97 mm
Weight	4 kg
Volume	5.5 L

Interfaces

Ethernet Backhaul	RJ-45 (POE Capable)
GPS	N-Type
Cellular Backhaul (3G/4G)	N-Type (Optional)
Hybrid Optical and DC Power	Harting Hybrid (Optional)
LoRa Antenna (2 ports)	N-Type (2nd Port Optional)
Power	-48VDC

Regulatory Compliance

Safety	UL 60950-1 (US/C), IEC 60950-1 (CE)
Environmental	ETSI EN 300 019-2-1, 300 019-2-2 ETSI EN 300 019-2-3, 300 019-2-4
Regulatory	FCC Part 15 ETSI EN 300 489-1/4, ETSI EN 302 326

LoRa Radio Parameters

ISM NA Band	902 - 915 MHz (Rx) 923 - 928 MHz (Tx)
Tx Power	2 x 1W (2 x 30 dBm)
Rx Sensitivity	-142 dBm (SF12, 293 bits/sec)
Rx Noise Figure	4 dB
Rx Linearity	-10 dBm
Rx Dynamic Range	70 dB Analog, 100+ dB Digital
Tx to Rx Isolation	75 dB

Software and Management

GUI	Embedded Managment Webpage Auto-discoverable over IP
Tools	Access Control List managment 3G/4G Parameter Configuration System Health Monitor Flight Recorder Radio Configuration and Control Remote Software Upgrade Active and Passive image management
Networking	DHCPv4 client TFTP server HTTP server Firewall and Access Lists

Specifications subject to change without notice.

At TEKTELIC Communications we develop and build high performance wireless products including Small Cell Base Stations, Wireless Backhaul Systems, High Power Radios, Amplifiers and IOT Gateways.

For more information please visit www.tektelic.com

TEKTELIC communications

Amphenol ANTENNA SOLUTIONS

840...925 MHz

JAYBEAM Wireless

7553xxx

Single Band | Omni-Directional | Colinear | V-Pol | 360° | 5.1 dBi | Fixed Electrical Tilt

- Rugged and durable UHF colinear antenna designed for Telemetry, Paging and Trunked Radio applications
- Housed inside a a high-strength glass fibre shroud
- Includes an integrated mounting clamp allowing easy installation on poles or horizontal rails
- Robust antenna design insures reliable operation in harsh environmental conditions

Ordering Options		
Replace "xxx" in the model number with one of the options below to signify the desired frequency band		
	Model Number	**Frequency Band**
Model Number Options (xxx)	7553865	840-890 MHz
	7553893	860-925 MHz
Electrical Characteristics		
Frequency Band	See Options Listed Above	
Polarization	Vertical	
Horizontal Beamwidth	360°	
Vertical Beamwidth	35°	
Gain	3.0 dBd (5.1 dBi)	
Impedance	50Ω	
VSWR	< 1.5:1	
Power Rating	150 W	
Connector Type	N Female + 0.5 m RG213 cable	
Lightning Protection	DC Grounded	
Mechanical Characteristics		
Shroud Material / Color	Glass Fibre (Ø21mm) / White	
Mounting Section Material	Aluminium	
Dimensions (Length)	730 mm	28.7 in
Weight without Mounting Brackets	0.5 kg	1.1 lbs
Wind Load @ 160 km/hr (100 mph)	35 N	7.9 lbf
Mounting Options		
Mounting Bracket Kit	Integral mounting clamp and V bolts for pipe or horizontal rail	
Fits Pipe/Rail Diameter	38-50 mm	1.5-2.0 in

See pages 3 & 4 for additional mounting information.

7553xxx

Single Band | Omni-Directional | Colinear | V-Pol | 360° | 5.1 dBi | Fixed Electrical Tilt

Antenna Patterns

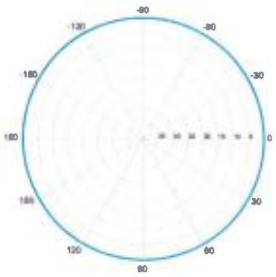

Horizontal

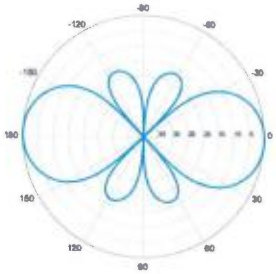

Vertical

Return Loss

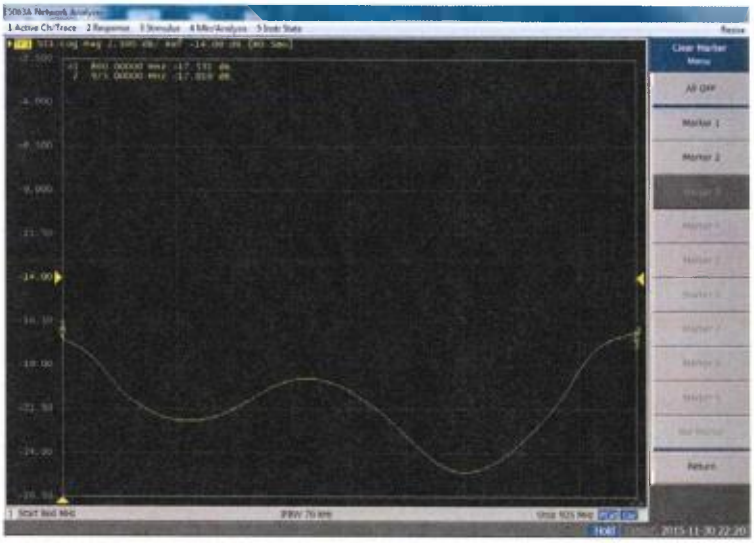

Gain Chart

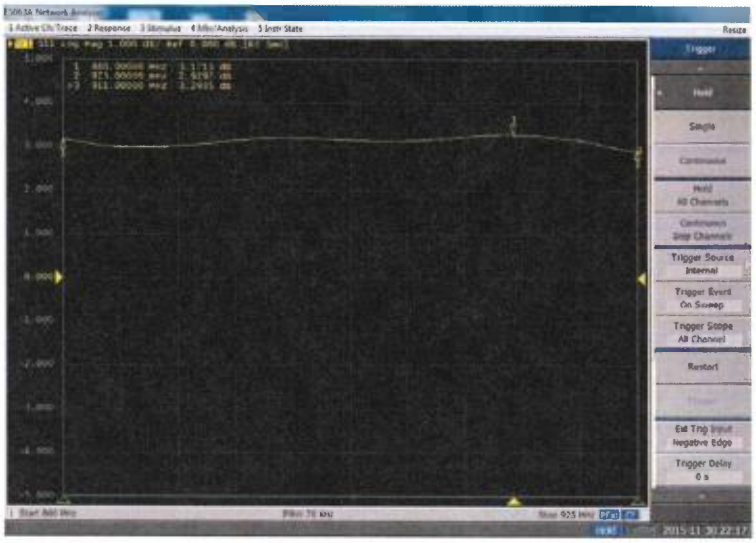

Note: Return loss, gain and patterns are for the 860-925 MHz model

7553xxx

Single Band | Omni-Directional | Colinear | V-Pol | 360° | 5.1 dBi | Fixed Electrical Tilt

Assembly & Mounting Instructions	
Please read these instructions fully before commencing	
Tools Required	13 mm A/F Spanner
Mounting (see mounting variations section)	Securely fix mast clamp to vertical or horizontal mounting rail as required. Tighten fixings to required torque (M8 = 20Nm). Ensure adequate lightning protection. Envelope is provided by installation.
Connection	Ensure connector is clean and dry. Mate with feeder cable connector. Cover with plastic sleeve and seal in customer approved manner. Ensure cable routing is not stressed. Cable minimum bend radius is 51.5 mm.

Maintenance

Annual VSWR and visual inspection for loose or missing parts should ensure stated performance is maintained.

Mounting Variations

Standard Mounting (Included)

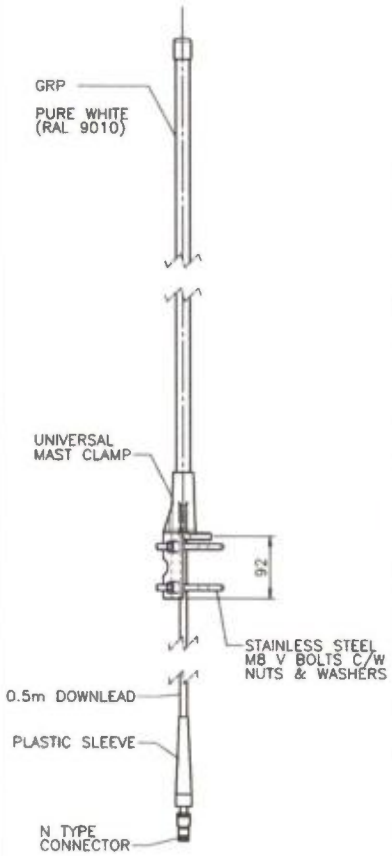

Parts Identification

Vertical Mounting Tube (Connector passes through middle of tube)

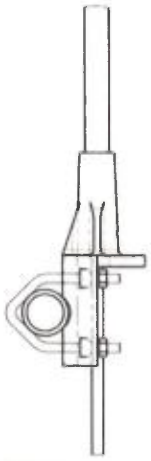

Horizontal Mounting Tube

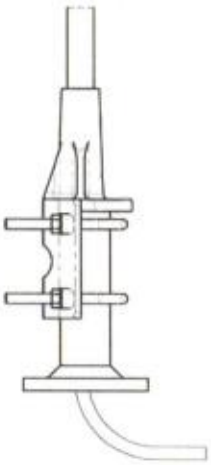

Deck Mounting (With connector passing to below deck)

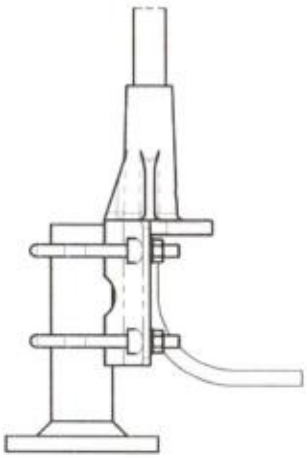

Deck Mounting (With connector remaining above deck)

7553xxx

Single Band | Omni-Directional | Colinear | V-Pol | 360° | 5.1 dBi | Fixed Electrical Tilt

Mounting Variations	Model Number	Orientation	Assembly
Optional Mounting Arrangement (ordered separately)	XSL9256087	Horizontal	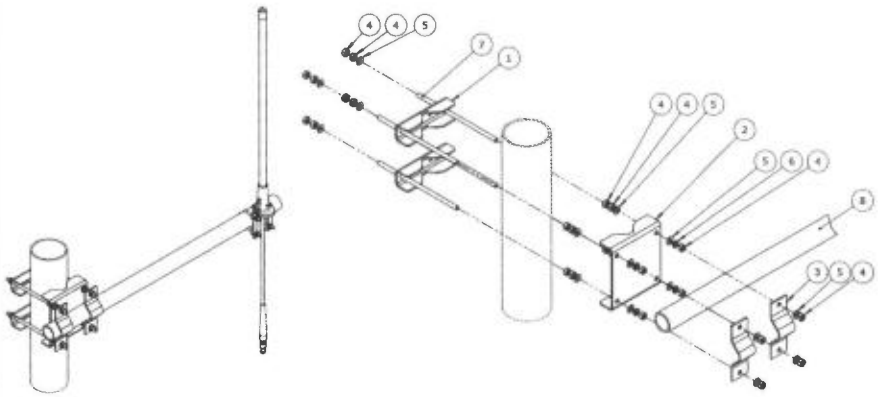
		Vertical	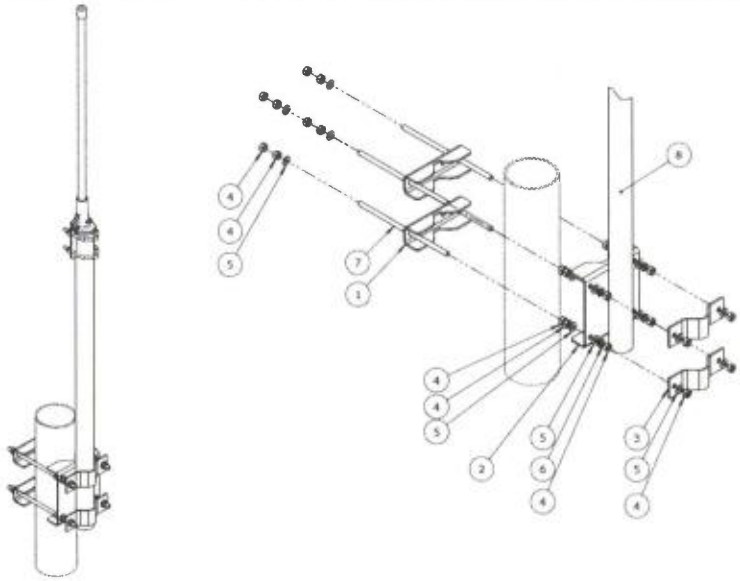

Parts List

Item Number	Description	Quantity
1	Mounting Bracket Clamp	2
2	Universal V & H Bracket	1
3	V Clamp	2
4	Galvanized, M10 Full Nut	24
5	Galvanized, M10 Plain Washer	16
6	Galvanized, M10 S/Coil Spring Washer	4
7	Galvanized, M10 x 260 mm Studding	4
8	Aluminium Tube, Ø1-29/32" x 7SWG x 1000 mm	1

VICINITY MAP

PHOTOSIMULATION VIEWPOINTS

machineQ
A COMCAST SERVICE

SFO-CA-M-N-0000006-K16
01121.000730.000730A
2001 VAN NESS AVENUE
SAN FRANCISCO, CA 94109

SDC WIRELESS
5015 SHOREHAM PLACE, SUITE 150
SAN DIEGO, CA 92122
OFFICE (619) 736-3766

DISCLAIMER:

THIS PHOTOSIMULATION IS INTENDED AS A GRAPHICAL REPRESENTATION OF EXISTING AND PROPOSED SITE CONDITIONS BASED ON THE PROJECT / DRAWING PLANS. IT IS NOT INTENDED FOR CONSTRUCTION. ACTUAL, FINAL CONSTRUCTION MAY VARY

PHOTOSIMULATION VIEW 1

LOOKING NORTHWEST

machineQ
A COMCAST SERVICE

SFO-CA-M-N-0000006-K16
01121.000730.000730A
2001 VAN NESS AVENUE
SAN FRANCISCO, CA 94109

SDC WIRELESS
5015 SHOREHAM PLACE, SUITE 150
SAN DIEGO, CA 92122
OFFICE: (619) 738-3766

EXISTING

PROPOSED

PHOTOSIMULATION VIEW 2

LOOKING NORTHWEST

machineQ
A COMCAST SERVICE

SFO-CA-M-N-0000006-K16
01121.000730.000730A
2001 VAN NESS AVENUE
SAN FRANCISCO, CA 94109

SFC WIRELESS
5015 SHOREHAM PLACE, SUITE 150
SAN DIEGO, CA 92122
OFFICE: (619) 736-3766

EXISTING

PROPOSED

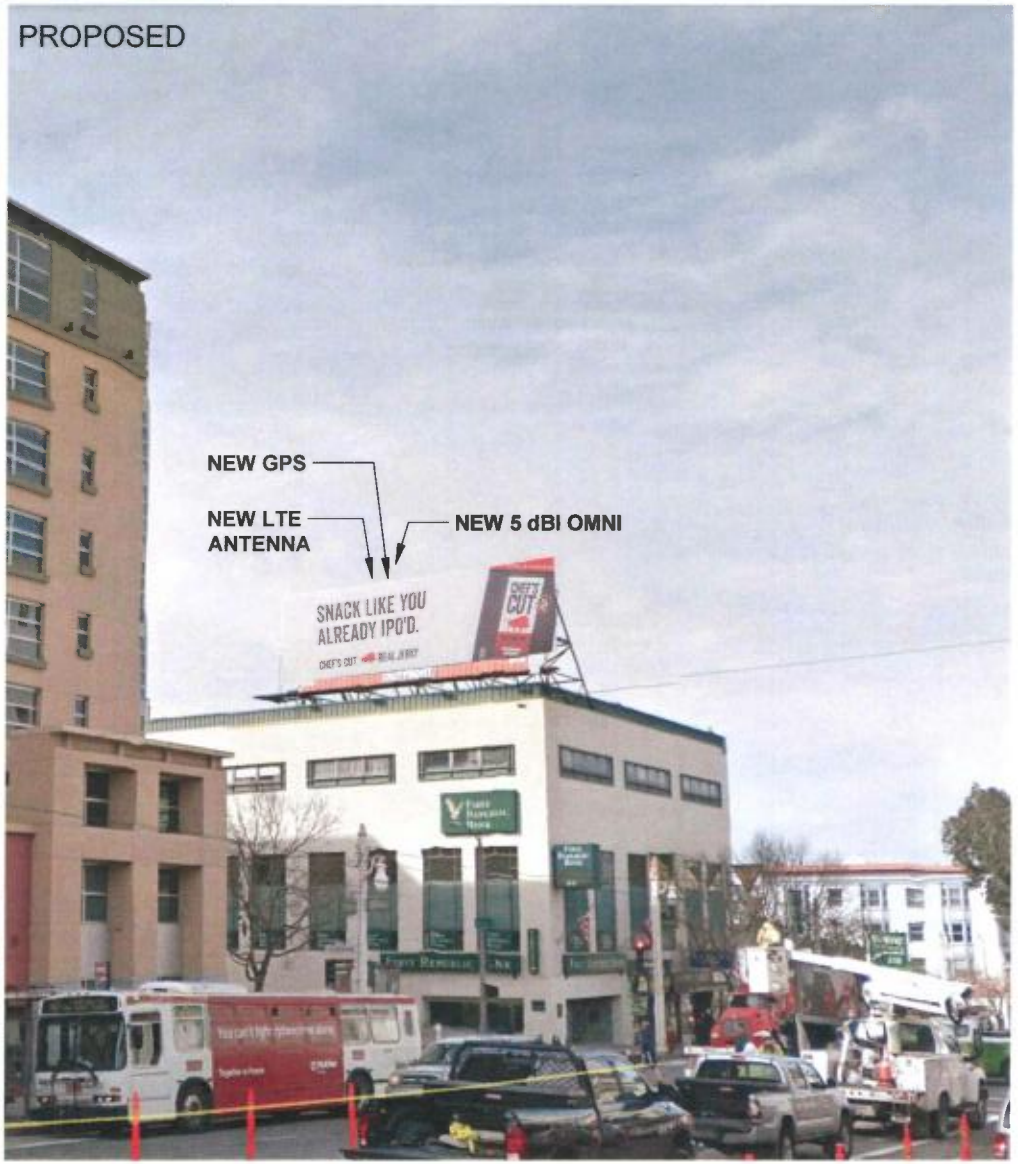

machineQ

A COMCAST SERVICE

PROJECT NAME: SFO-CA-M-N-0000006-K16 2001 VAN NESS AVENUE

COMCAST NUMBER: SFO-CA-M-N-0000006-K16

OUTFRONTBB NUMBER: 01121.000730.000730A

2001 VAN NESS AVENUE
SAN FRANCISCO, CA 94109

811 Know what's below. Call before you dig.

CALL 811
WWW.CALL811.COM
CONTRACTOR TO CALL TO VERIFY UTILITIES AT LEAST TWO WORKING DAYS PRIOR TO DIGGING

PROJECT TEAM

PROJECT MANAGEMENT:
SAC WIRELESS
MATTHEW NICKEL
540 W. MADISON ST, 16TH FLOOR
CHICAGO, ILLINOIS 60661
PHONE: (630) 674-2821
EMAIL: matthew.nickel@sacw.com

SITE ACQUISITION:
SAC WIRELESS
STEVE BARICH
540 W. MADISON ST, 16TH FLOOR
CHICAGO, ILLINOIS 60661
PHONE: (312) 967-4285
EMAIL: steve.barich@sacw.com

ARCHITECT:
SAC WIRELESS
NESTOR POPOWYCH, A.I.A.
540 W. MADISON ST, 16TH FLOOR
CHICAGO, ILLINOIS 60661
PHONE: (312) 953-6777
EMAIL: nestor.popowych@sacw.com

CONSTRUCTION:
SAC WIRELESS
TERRY KILLGORE
1401 WILLOW PASS, SUITE 350
CONCORD, CA 94519
PHONE: (904) 923-9028
EMAIL: terry.killgore@sacw.com

ENGINEER:
SAC WIRELESS
TAHZAY RAMIREZ, P.E.
5015 SHOREHAM PLACE SUITE 150
SAN DIEGO, CA 92122
PHONE: (619) 736-3766 X114
EMAIL: tahzay.ramirez@sacw.com

GENERAL CONTRACTOR NOTES

DO NOT SCALE DRAWINGS IF NOT FULL SIZE (24 X 36)

CONTRACTOR SHALL VERIFY ALL PLANS AND EXISTING DIMENSIONS AND CONDITIONS ON THE JOB SITE AND SHALL IMMEDIATELY NOTIFY THE ARCHITECT IN WRITING OF ANY DISCREPANCIES BEFORE PROCEEDING WITH THE WORK OR BE RESPONSIBLE FOR THE SAME.

DISCLAIMER

THESE DRAWINGS REPRESENT AN EXISTING TELECOMMUNICATIONS COMPOUND AND WERE PRODUCED WITHOUT THE BENEFIT OF A LAND SURVEY. ALL PROPERTY LINES, EASEMENTS, AND SETBACKS SHALL BE VERIFIED PRIOR TO START OF CONSTRUCTION. SAC WIRELESS DOES NOT GUARANTEE THE ACCURACY OF SAID PROPERTY LINES, EASEMENTS AND SETBACKS.

VICINITY MAP

DRIVING DIRECTIONS

FROM: SAN FRANCISCO INTERNATIONAL AIRPORT

TO: 2001 VAN NESS AVENUE SAN FRANCISCO, CA 94109

1. GET ON US-101 N FROM AIRPORT ACCESS RD
2. HEAD SOUTH
3. CONTINUE ONTO AIRPORT ACCESS RD
4. KEEP LEFT TO STAY ON AIRPORT ACCESS RD
5. MAKE A U-TURN
6. CONTINUE STRAIGHT TO STAY ON AIRPORT ACCESS RD
7. USE THE 2ND FROM THE RIGHT LANE TO KEEP RIGHT AT THE FORK AND CONTINUE TOWARD US-101 N
8. KEEP LEFT AT THE FORK, FOLLOW SIGNS FOR SAN BRUNO/U.S. 101 N AND MERGE ONTO US-101 N
9. FOLLOW US-101 N TO MARKET ST IN SAN FRANCISCO
10. MERGE ONTO US-101 N
11. KEEP LEFT TO STAY ON US-101 N
12. TAKE FRANKLIN ST TO VAN NESS AVE
13. TURN RIGHT ONTO MARKET ST
14. TURN RIGHT ONTO PACIFIC AVE
15. TURN RIGHT AT THE 1ST CROSS STREET ONTO VAN NESS AVE

PROJECT DESCRIPTION

THIS PROJECT IS A COMCAST FACILITY. IT CONSISTS OF THE FOLLOWING:

- (2) NEW COMCAST 5dBI OMNI ANTENNAS
- (1) NEW COMCAST LTE OMNI ANTENNA
- (1) NEW COMCAST GPS ANTENNA
- (1) NEW COMCAST MACRO GATEWAY RADIO
- (1) NEW COMCAST OUTDOOR PoE INJECTOR
- (1) NEW COMCAST GROUND BAR

PROJECT SUMMARY

APPLICANT/LESSEE:
machineQ
A COMCAST SERVICE
COMCAST CENTER
1701 JFK BLVD.
PHILADELPHIA, PA 19103

ASSESSOR'S PARCEL NUMBER:
0594/002
PLANING DICSTRIC 2
ZONING: RC-4

APPLICANT'S REPRESENTATIVE:
SAC WIRELESS
540 W. MADISON ST, 16TH FLOOR
CHICAGO, ILLINOIS 60661
PHONE:

PROPERTY OWNER:
OWNER: OUTFRONTBB
ADDRESS: 405 LEXINGTON AVENUE, 14TH FLOOR NEW YORK, NY 10174
CONTACT: RANDY GAYER
EMAIL: RGAYER@DIAMONDCOMM.COM

BILLBOARD OWNER:
OWNER: OUTFRONTBB

PROPERTY INFORMATION:
PROJECT NAME: SFO-CA-M-N-0000006-K16 2001 VAN NESS AVENUE
COMCAST NUMBER: SFO-CA-M-N-0000006-K16
OUTFRONTBB NUMBER: 01121.000730.000730A
SITE ADDRESS: 2001 VAN NESS AVENUE SAN FRANCISCO, CA 94109

GEODETIC COORDINATES:
LAT. 37.794061° N (NAD83)
LONG. -122.423337° W (NAD83)
ELEV. 188' AMSL

CONSTRUCTION INFORMATION:
AREA OF CONSTRUCTION: N/A
JURISDICTION: SAN FRANCISCO
OCCUPANCY: UNMANNED
TYPE OF CONSTRUCTION: ALTERATION
ACCESSIBILITY REQUIREMENTS: FACILITY IS UNMANNED AND NOT FOR HUMAN HABITATION. ACCESSIBILITY NOT REQUIRED.

CODE COMPLIANCE

ALL WORK AND MATERIALS SHALL BE PERFORMED AND INSTALLED IN ACCORDANCE WITH THE CURRENT EDITIONS OF THE FOLLOWING CODES AS ADOPTED BY THE LOCAL GOVERNING AUTHORITIES. ALL WORK SHALL CONFORM TO 2013 EDITION TITLE 24, CALIFORNIA CODE OF REGULATIONS. NOTHING IN THESE PLANS IS TO BE CONSTRUED TO PERMIT WORK NOT CONFORMING TO THE LATEST EDITIONS OF THE FOLLOWING CODES.

1. **2016 CALIFORNIA ADMINISTRATIVE CODE**
2. **2016 CALIFORNIA BUILDING CODE**
3. **2016 CALIFORNIA ELECTRICAL CODE**
4. **2016 CALIFORNIA FIRE CODE 2.06**

SHEET	DESCRIPTION	REV
T-1	TITLE SHEET	1
T-2	GENERAL NOTES & SPECIFICATIONS	1
A-1	SITE PLAN	1
A-2	ENLARGED SITE PLAN & ANTENNA & EQUIPMENT PLAN	1
A-3	EAST & SOUTH ELEVATIONS	1
A-4	EQUIPMENT DETAILS & SPECIFICATIONS	1
A-4.1	EQUIPMENT DETAILS & SPECIFICATIONS	1
E-1	1-LINE DIAGRAM & NOTES	1
G-1	SCHEMATIC GROUNDING PLAN & DETAILS	1

CONSTRUCTION DRAWINGS

ISSUE STATUS

REV.	DATE	DESCRIPTION	BY
A	05/08/17	90% CONSTRUCTION	EC
0	05/11/17	100% CONSTRUCTION	CM
1	05/17/17	100% CONSTRUCTION	AS

SAC WIRELESS
SAC AE DESIGN GROUP, INC.
5015 SHOREHAM PLACE, STE. 150
SAN DIEGO, CA 92122
www.sacw.com
619.736.3766

machineQ
A COMCAST SERVICE
COMCAST CENTER
1701 JFK BLVD, PHILADELPHIA, PA 19103

LICENSED ARCHITECT
NESTOR T. POPOWYCH
C-27596
RENEWAL 4-30-17
STATE OF CALIFORNIA
05-31-17
DATE:

PROJECT NAME:
SFO-CA-M-N-0000006-K16
2001 VAN NESS AVENUE
COMCAST NUMBER: SFO-CA-M-N-0000006-K16
OUTFRONTBB: 01121.000730.000730A
2001 VAN NESS AVENUE
SAN FRANCISCO, CA 94109

SHEET TITLE:
TITLE SHEET

T-1

GENERAL NOTES:

1. THIS FACILITY IS AN UNMANNED CELLULAR TELEPHONE EQUIPMENT FACILITY. THE OCCUPANCY CLASSIFICATION IS U [2016 CBC, TITLE 24, PART 2, VOLUME 1, SECTION 312, AND SECTION 307.1.1 EXCEPTION #9].
2. THIS FACILITY IS EXEMPT FROM ACCESIBILITY REQUIREMENTS PER 2016 CBC SECTION 11B-203.5 THIS FACILITY IS NON-OCCUPIABLE SPACE AND ENTERED ONLY BY SERVICE PERSONNEL. THIS SPACE IS NOT FOR HUMAN OCCUPANCY.
3. THE CONTRACTOR SHALL VERIFY ALL EXISTING CONDITIONS AND DIMENSIONS PRIOR TO SUBMITTING HIS BID. ANY DISCREPANCIES, CONFLICTS OR OMISSIONS SHALL BE REPORTED TO THE ARCHITECT / ENGINEER PRIOR TO SUBMITTING BIDS, AND PROCEEDING WITH ANY WORK.
4. THE CONTRACTOR SHALL NOTIFY ARCHITECT / ENGINEER OF ANY ERRORS, OMISSIONS, OR DISCREPANCIES AS THEY MAY BE DISCOVERED IN THE PLANS, SPECIFICATIONS, & NOTES PRIOR TO STARTING CONSTRUCTION. INCLUDING BUT NOT LIMITED BY DEMOLITION. THE CONTRACTOR SHALL BE RESPONSIBLE FOR CORRECTING ANY ERRORS, OMISSION, OR INCONSISTENCY AFTER THE START OF CONSTRUCTION WHICH HAS NOT BEEN BROUGHT TO THE ATTENTION OF THE ARCHITECT/ENGINEER AND SHALL INCUR ANY EXPENSES TO RECTIFY THE SITUATION. THE METHOD OF CORRECTION SHALL BE APPROVED BY THE ARCHITECT / ENGINEER RESPONSIBLE OF THE PROJECT.
5. PRIOR TO STARTING CONSTRUCTION, THE CONTRACTOR HAS THE RESPONSIBILITY TO LOCATE ALL EXISTING UTILITIES, WHETHER OR NOT SHOWN ON THE PLANS, AND TO PROTECT THEM FROM DAMAGE. THE CONTRACTOR OR SUBCONTRACTOR SHALL BEAR THE EXPENSE OF REPAIRING OR REPLACING ANY DAMAGE TO THE UTILITIES CAUSED DURING THE EXECUTION OF THE WORK. CONTACT USA DIG ALERT @ 800-227-2600
6. PRIOR TO STARTING CONSTRUCTION, THE CONTRACTOR SHALL PROTECT ALL AREAS FROM DAMAGE WHICH MAY OCCUR DURING CONSTRUCTION. ANY DAMAGE TO NEW OR EXISTING SURFACES, STRUCTURES OR EQUIPMENT SHALL BE IMMEDIATELY REPAIRED OR REPLACED TO THE SATISFACTION OF THE PROPERTY OWNER. THE CONTRACTOR SHALL BEAR THE EXPENSE OF REPAIRING OR REPLACING ANY DAMAGED AREAS.
7. A COPY OF THE APPROVED PLANS SHALL BE KEPT IN A PLACE SPECIFIED BY THE GOVERNING AGENCY, AND BY LAW SHALL BE AVAILABLE FOR INSPECTION AT ALL TIMES. IT IS THE CONTRACTOR'S RESPONSIBILITY TO ENSURE ALL CONSTRUCTION SETS REFLECT THE SAME INFORMATION AS THE APPROVED PLANS. THE CONTRACTOR SHALL ALSO MAINTAIN ONE SET OF PLANS AT THE SITE FOR THE PURPOSE OF DOCUMENTING ALL AS-BUILT CHANGES, REVISIONS, ADDENDA, OR CHANGE ORDERS. THE CONTRACTOR SHALL FORWARD THE AS-BUILT W/ REDLINED DRAWINGS TO THE ARCHITECT / ENGINEER RESPONSIBLE OF THE PROJECT AT THE CONCLUSION OF THE PROJECT.
8. THE CONTRACTOR SHALL BE RESPONSIBLE FOR THE COMPLETE SECURITY OF THE SITE WHILE THE WORK IS IN PROGRESS UNTIL THE JOB IS COMPLETE.
9. THE CONTRACTOR IS RESPONSIBLE TO PROVIDE TEMPORARY POWER, WATER, AND TOILET FACILITIES AS REQUIRED BY THE PROPERTY OWNER OR GOVERNING AGENCY.
10. ALL CONSTRUCTION THROUGH THE PROJECT SHALL CONFORM TO THE LATEST C.B.C. AND ALL OTHER GOVERNING CODES, INCLUDING THE CALIFORNIA ADMINISTRATIVE CODES TITLE 8, 19, AND 24. THE MOST RESTRICTIVE CODE SHALL GOVERN.
11. THE CONTRACTOR AND SUBCONTRACTOR SHALL COMPLY WITH ALL LOCAL AND STATE REGULATIONS INCLUDING ALL OSHA REQUIREMENTS.
12. WHEN REQUIRED STORAGE OF MATERIALS OCCURS, THEY SHALL BE EVENLY DISTRIBUTED OVER THE FLOOR OR ROOF SO AS NOT TO EXCEED THE DESIGNED LIVE LOADS FOR THE STRUCTURE. TEMPORARY SHORING OR BRACING SHALL BE PROVIDED WHERE THE STRUCTURE OR SOIL HAS NOT ATTAINED THE DESIGN STRENGTH FOR THE CONDITIONS PRESENT.
13. THE CONTRACTOR SHALL SUPERVISE AND COORDINATE ALL WORK, USING HIS PROFESSIONAL KNOWLEDGE AND SKILLS. HE IS SOLELY RESPONSIBLE FOR ALL CONSTRUCTION MEANS, METHODS, TECHNIQUES, PROCEDURES AND SEQUENCING AND COORDINATING ALL PORTIONS OF THE WORK UNDER THE PROJECT.
14. THE CONTRACTOR SHALL BE RESPONSIBLE TO OBTAIN AND PAY FOR ALL PERMITS, LICENSES AND INSPECTIONS WITH RESPECT TO THE WORK TO COMPLETE THE PROJECT. BUILDING PERMIT APPLICATIONS SHALL BE FILED BY THE OWNER OR AUTHORIZED AGENT. CONTRACTOR SHALL OBTAIN THE PERMIT AND MAKE FINAL PAYMENT OF SAID DOCUMENT.
15. ALL DIMENSIONS TAKE PRECEDENCE OVER SCALE. DRAWINGS ARE NOT TO BE SCALED UNDER ANY CIRCUMSTANCES.
16. THE CONTRACTOR SHALL PROVIDE ALL NECESSARY BLOCKING, BACKING, FRAMING, HANGERS OR SUPPORTS FOR INSTALLATION OF ITEMS INDICATED ON THE DRAWINGS.
17. THE CONTRACTOR SHALL PROVIDE THE FIRE MARSHALL OR U.L APPROVED MATERIALS TO FILL/SEAL PENETRATIONS THROUGH FIRE RATED ASSEMBLIES.
18. NEW CONSTRUCTION ADDED TO EXISTING CONSTRUCTION SHALL BE MATCHED IN FORM, TEXTURE, MATERIAL AND PAINT COLOR EXCEPT AS NOTED IN THE PLANS.
19. THE CONTRACTOR SHALL PROVIDE PORTABLE FIRE EXTINGUISHERS HAVING A MINIMUM 2A:10-B:C RATING WITHIN 75FT. OF TRAVEL TO ALL PORTIONS OF THE CONSTRUCTION AREA.
20. MATERIALS TESTING SHALL BE TO THE LATEST STANDARDS AVAILABLE AS REQUIRED BY THE LOCAL GOVERNING AGENCY RESPONSIBLE FOR APPROVING THE RESULTS.
21. ALL GENERAL NOTES AND STANDARD DETAILS ARE THE MINIMUM REQUIREMENTS TO BE USED IN CONDITIONS WHICH ARE NOT SPECIFICALLY SHOWN OTHERWISE.
22. ALL DEBRIS AND REFUSE IS TO BE REMOVED FROM THE PROJECT. PREMISES SHALL BE LEFT IN A CLEAN BROOM FINISHED CONDITION AT ALL TIMES.
23. BUILDING INSPECTORS AND/OR OTHER BUILDING OFFICIALS ARE TO BE NOTIFIED PRIOR TO ANY GRADING AND CONSTRUCTION EFFORT AS MANDATED BY THE GOVERNING AGENCY.
24. ALL SYMBOLS AND ABBREVIATIONS ARE CONSIDERED CONSTRUCTION INDUSTRY STANDARDS. IF A CONTRACTOR HAS A QUESTION REGARDING THEIR EXACT MEANING THE ARCHITECT OR THE ARCHITECT / ENGINEER RESPONSIBLE OF THE PROJECT SHALL BE NOTIFIED FOR CLARIFICATIONS.

SPECIFICATIONS:

METALS

STRUCTURAL FRAMING SYSTEM AND EQUIPMENT

1. CABLE LADDERS AT INTERIOR SPACES WHERE INDICATED SHALL BE 1-1/2" SOLID BAR STRINGERS TYPE
2. ALL UNISTRUT SHALL BE P1000 (1-5/8").
3. MICROFLECT SHALL BE B 1 1 1 8 (U.N.O.) TO MATCH CABLE TRAY.
4. CABLE RUNS ON ROOF TOP AND OUTDOOR APPLICATIONS, SHALL BE HOT DIPPED GALVANIZED AFTER FABRICATION.
5. ALL ANTENNA SPECS. PER RF DATA SHEET.

ELECTRICAL

1. REFER TO DRAWINGS FOR SITE SPECIFIC INFORMATION
2. ALL ELECTRIC WORK TO COMPLY WITH THE LATEST EDITION OF THE CALIFORNIA ELECTRICAL CODE. (REFER TO THE COVER SHEET)
3. ALL INTERIOR SEISMIC UNISTRUT SHALL BE GROUNDED WITH #6 STRANDED COPPER WITH GREEN JACKET. ALL CONNECTIONS TO BE DOUBLE LUG.
4. BEFORE STARTING TRENCHING, THE CONTRACTOR SHALL VERIFY LOCATION AND DEPTH OF ALL EXISTING LINES AFFECTED BY THE CONTRACT AND IMMEDIATELY NOTIFY THE PROJECT MANAGER IF ANY REROUTING OF EXISTING LINES IS NECESSARY.

ISSUE STATUS

REV.	DATE	DESCRIPTION	BY
A	05/08/17	90% CONSTRUCTION	EC
0	05/11/17	100% CONSTRUCTION	CM
1	05/17/17	100% CONSTRUCTION	AS

SAC WIRELESS
SAC AE DESIGN GROUP, INC.
5015 SHOREHAM PLACE, STE. 150
SAN DIEGO, CA 92122
www.sacw.com
619.736.3766

machineQ
A COMCAST SERVICE
COMCAST CENTER
1701 JFK BLVD, PHILADELPHIA, PA 19103

LICENSED ARCHITECT
NESTOR T. POPOWYCH
C-27495
RENEWAL 4-30-17
STATE OF CALIFORNIA
05-31-17
DATE:

PROJECT NAME:
SFO-CA-M-N-0000006-K16
2001 VAN NESS AVENUE
COMCAST NUMBER: SFO-CA-M-N-0000006-K16
OUTFRONTBB: 01121.000730.000730A
2001 VAN NESS AVENUE
SAN FRANCISCO, CA 94109

SHEET TITLE:
GENERAL NOTES & SPECIFICATIONS

T-2

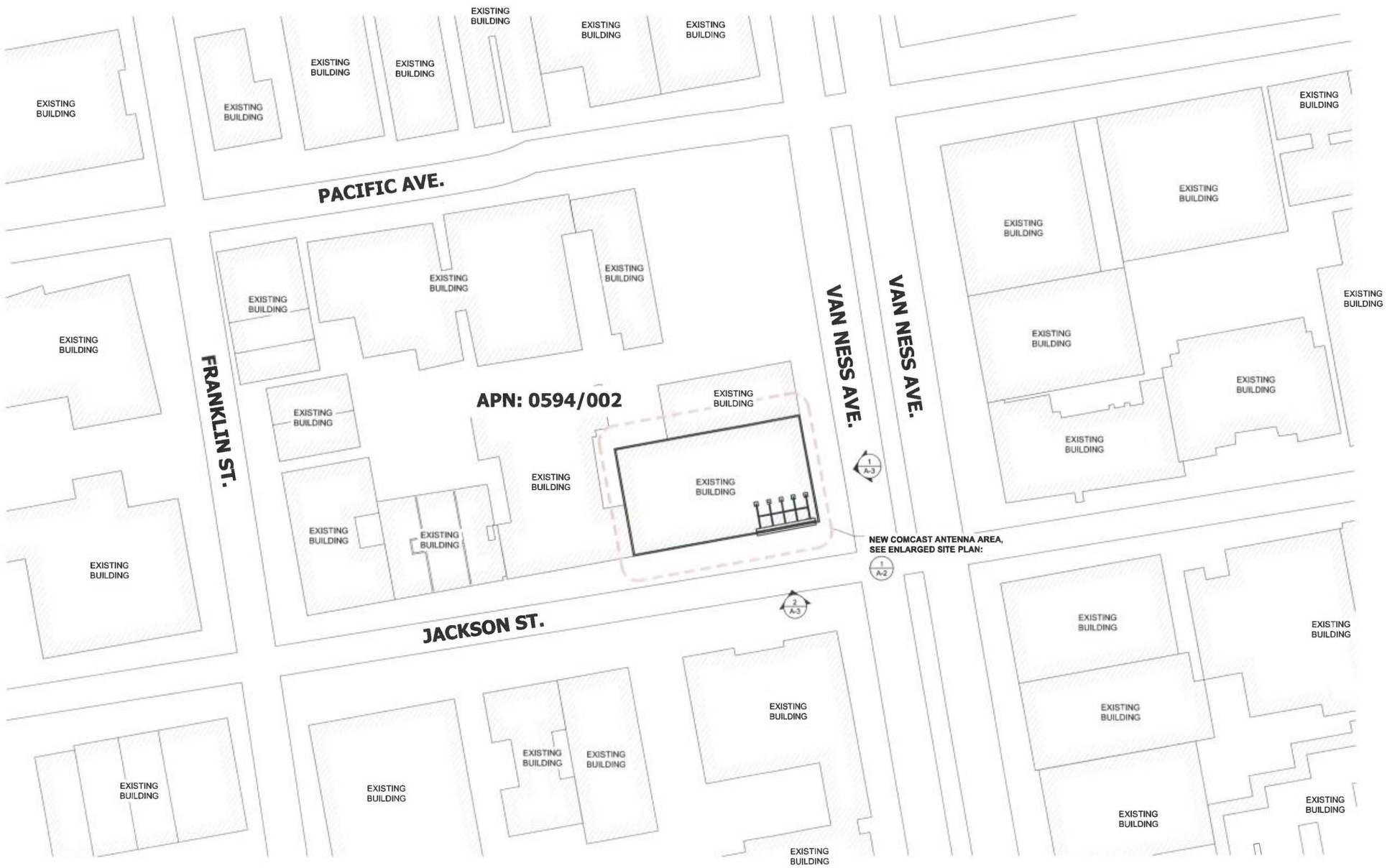

NORTH

100' 0 50' 100'

SCALE: 1" = 100'-0" (24x36)
(OR) 1/2" = 100'-0" (11x17)

1

SITE PLAN

ISSUE STATUS

REV.	DATE	DESCRIPTION	BY
A	05/08/17	90% CONSTRUCTION	EC
0	05/11/17	100% CONSTRUCTION	CM
1	05/17/17	100% CONSTRUCTION	AS

SAC WIRELESS
SAC AE DESIGN GROUP, INC.
5015 SHOREHAM PLACE, STE. 150
SAN DIEGO, CA 92122
www.sacw.com
619.736.3766

machineQ
A COMCAST SERVICE
COMCAST CENTER
1701 JFK BLVD, PHILADELPHIA, PA 19103

LICENSED ARCHITECT
NESTOR T. POPOWYCH
C-27496
RENEWAL 4-30-17
STATE OF CALIFORNIA
05-31-17
DATE:

PROJECT NAME:
SFO-CA-M-N-0000006-K16
2001 VAN NESS AVENUE
COMCAST NUMBER: SFO-CA-M-N-0000006-K16
OUTFRONTBB: 01121.000730.000730A
2001 VAN NESS AVENUE
SAN FRANCISCO, CA 94109

SHEET TITLE:
SITE PLAN

A-1

NOT USED

SCALE	3
N.T.S.	

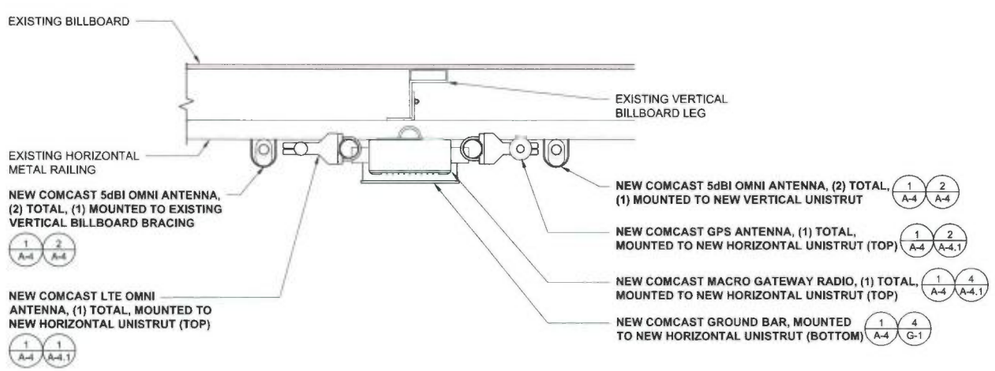

NORTH

ANTENNA LAYOUT

0 2" 4" 8"

SCALE: 1-1/2" = 1'-0" (24x36)
(OR) 3/4" = 1'-0" (11x17)

2

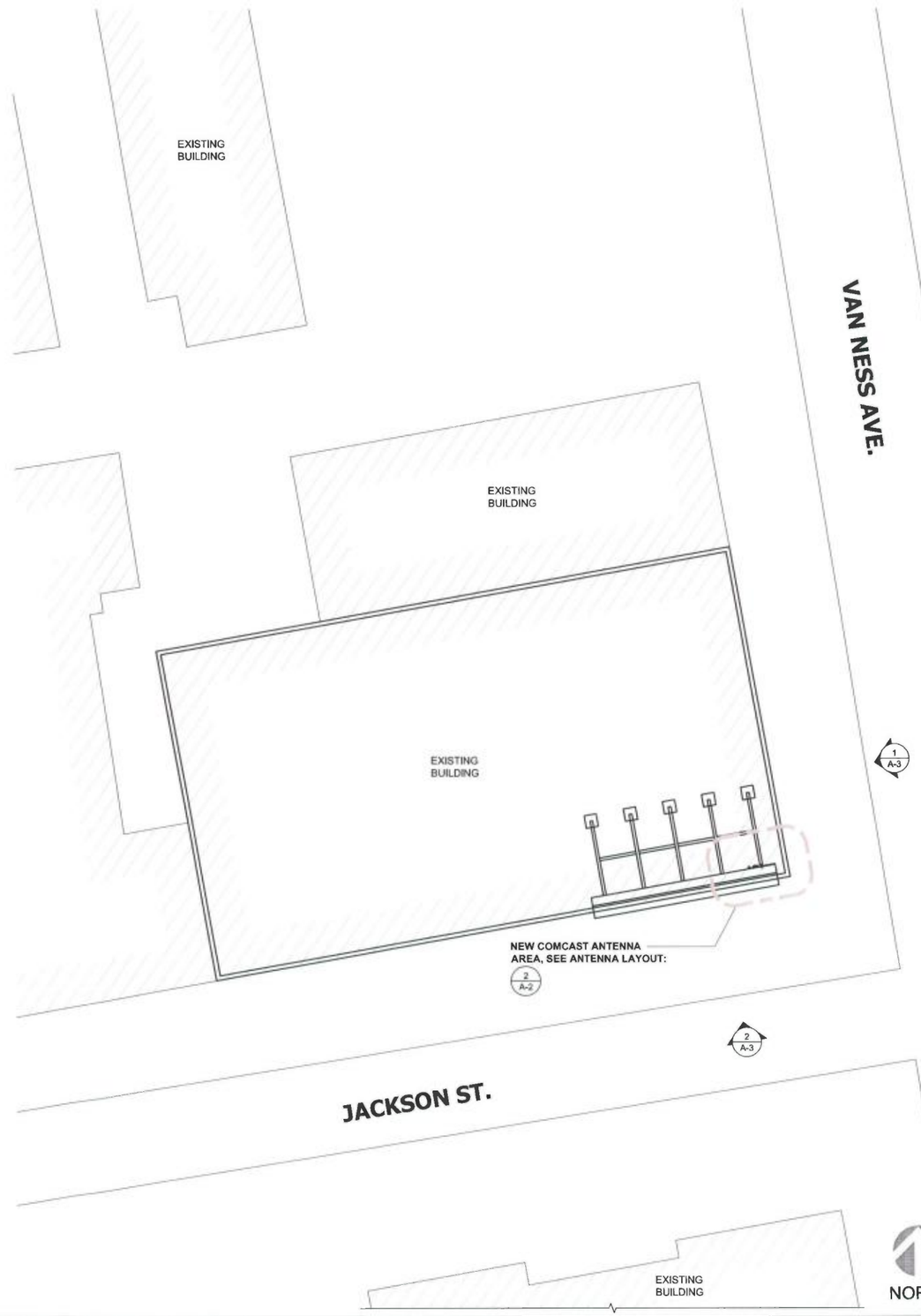

NORTH

ENLARGED SITE PLAN

0 10' 20' 30'

SCALE: 1/32" = 1'-0" (24x36)
(OR) 1/64" = 1'-0" (11x17)

1

ISSUE STATUS

REV.	DATE	DESCRIPTION	BY
A	05/08/17	90% CONSTRUCTION	EC
0	05/11/17	100% CONSTRUCTION	CM
1	05/17/17	100% CONSTRUCTION	AS

SAC WIRELESS
SAC AE DESIGN GROUP, INC.
5015 SHOREHAM PLACE, STE. 150
SAN DIEGO, CA 92122
www.sacw.com
619.736.3766

machineQ
A COMCAST SERVICE
COMCAST CENTER
1701 JFK BLVD, PHILADELPHIA, PA 19103

LICENSED ARCHITECT
NESTOR T. POPOWYCH
C-27496
RENEWAL 4-30-17
STATE OF CALIFORNIA

05-31-17
DATE:

PROJECT NAME:
SFO-CA-M-N-0000006-K16
2001 VAN NESS AVENUE

COMCAST NUMBER: SFO-CA-M-N-0000006-K16
OUTFRONTBB: 01121.000730.000730A

2001 VAN NESS AVENUE
SAN FRANCISCO, CA 94109

SHEET TITLE:
ENLARGED SITE PLAN & ANTENNA & EQUIPMENT PLAN

A-2

DISCLAIMER

THE ELEVATION HEIGHTS SPECIFIED IN THIS RECORD DRAWING ARE BASED UPON INFORMATION GATHERED DURING THE SITE VISIT AND/OR AVAILABLE DOCUMENTS. THE NEW COMCAST OMNI ANTENNA INSTALLATION WILL NOT PROTRUDE ABOVE THE EXISTING STRUCTURE HEIGHT NO MORE THAN 24" - 28". THE ARCHITECT ASSUMES NO RESPONSIBILITY FOR THE ACCURACY FOR ANY ERRORS OR OMISSIONS THAT MAY HAVE BEEN INCORPORATED INTO IT AS A RESULT OF INCORRECT INFORMATION PROVIDED. PARTIES RELYING ON THIS RECORD DOCUMENT ARE ADVISED TO OBTAIN AN A1 LETTER FROM A LICENSED SURVEYOR FOR VERIFICATION OF ITS ACCURACY.

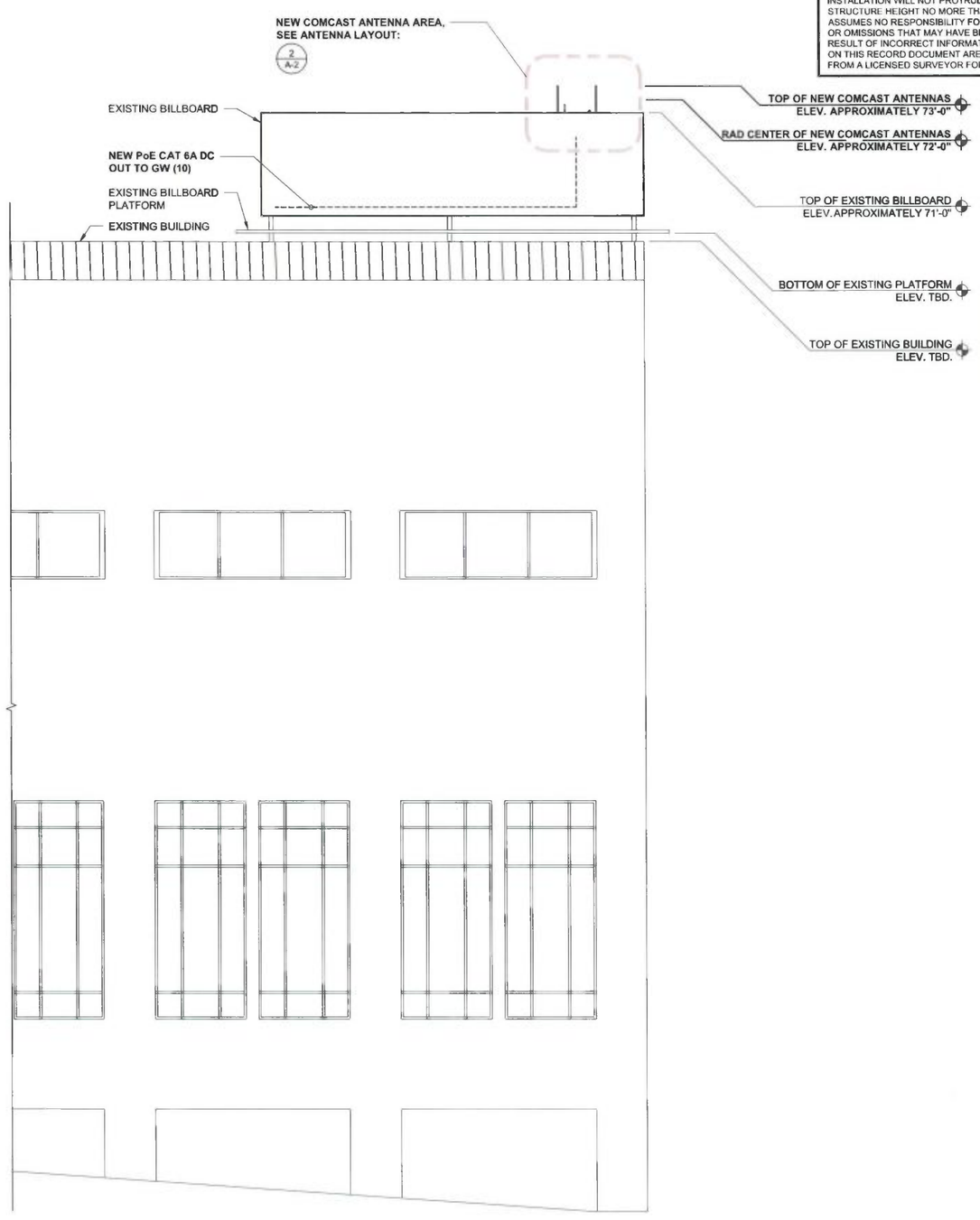

SOUTH ELEVATION

0 1.5' 3' 5'

SCALE: 3/16" = 1'-0" (24x36)
(OR) 3/32" = 1'-0" (11x17)

2

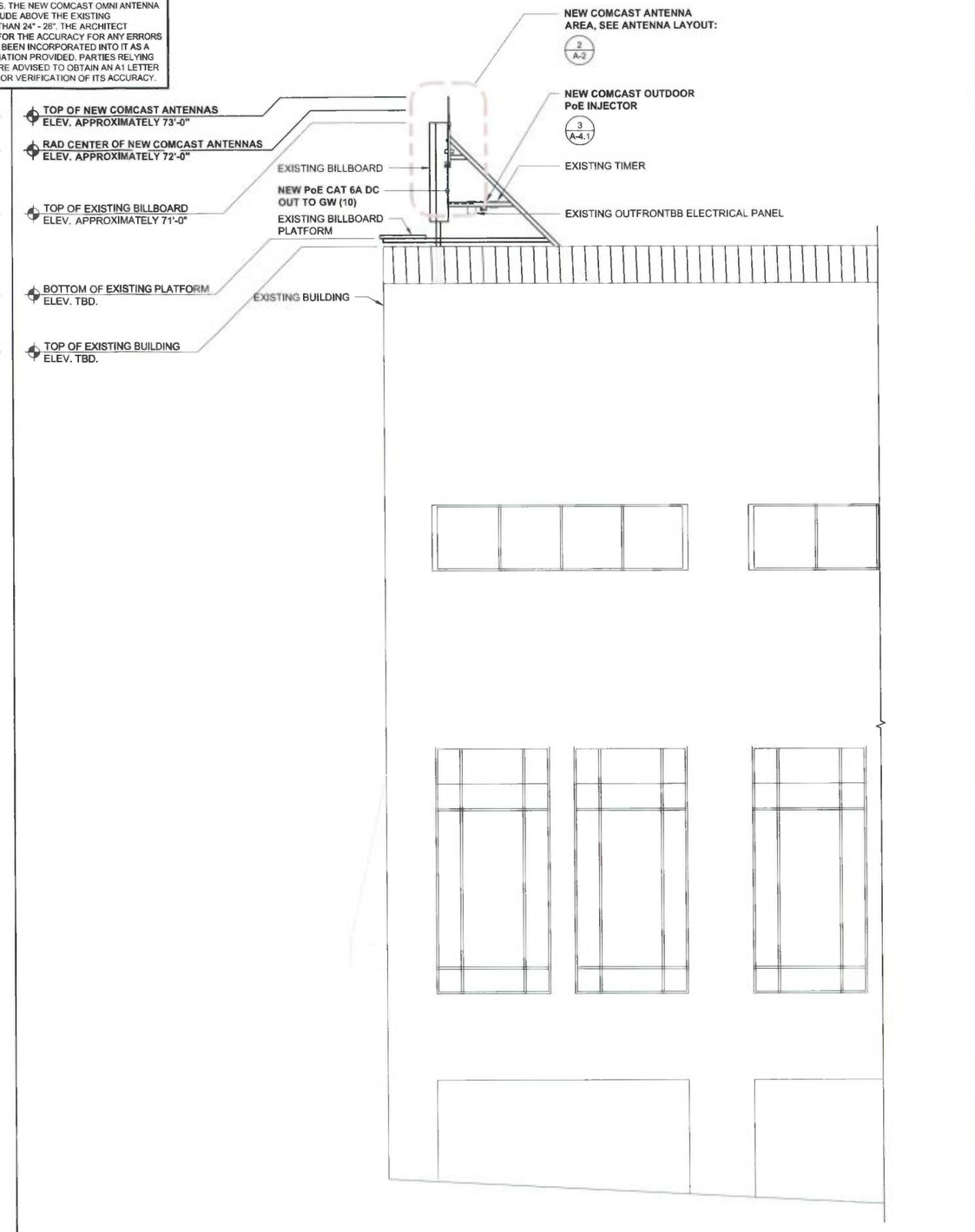

EAST ELEVATION

0 1.5' 3' 5'

SCALE: 3/16" = 1'-0" (24x36)
(OR) 3/32" = 1'-0" (11x17)

1

ISSUE STATUS

REV.	DATE	DESCRIPTION	BY
A	05/08/17	90% CONSTRUCTION	EC
0	05/11/17	100% CONSTRUCTION	CM
1	05/17/17	100% CONSTRUCTION	AS

SAC WIRELESS
SAC AE DESIGN GROUP, INC.
5015 SHOREHAM PLACE, STE. 150
SAN DIEGO, CA 92122
www.sacw.com
619.736.3766

machineQ
A COMCAST SERVICE
COMCAST CENTER
1701 JFK BLVD, PHILADELPHIA, PA 19103

LICENSED ARCHITECT
CESTON T. POPOWYCH
C-27496
RENEWAL 4-30-17
STATE OF CALIFORNIA

DATE: 05-31-17

PROJECT NAME:
SFO-CA-M-N-0000006-K16
2001 VAN NESS AVENUE

COMCAST NUMBER: SFO-CA-M-N-0000006-K16
OUTFRONTBB: 01121.000730.000730A

2001 VAN NESS AVENUE
SAN FRANCISCO, CA 94109

SHEET TITLE:
EAST & SOUTH ELEVATIONS

A-3

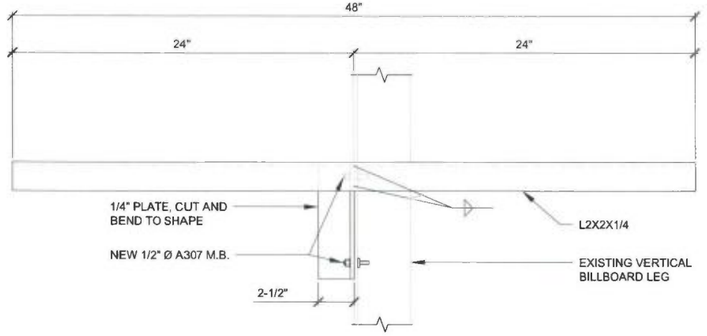

FRONT VIEW

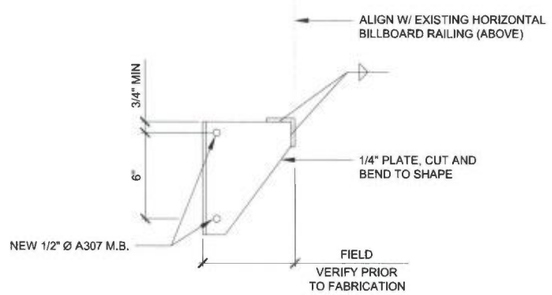

SIDE VIEW

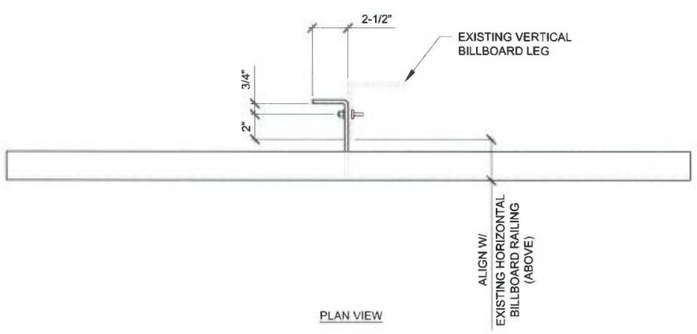

PLAN VIEW

METAL ANGLE DETAIL

SCALE	
N.T.S.	3

AMPHENOL
7553893

LENGTH: 28.7"

WEIGHT W/O MOUNTING BRACKET: 1.1LBS

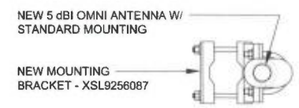

PLAN VIEW

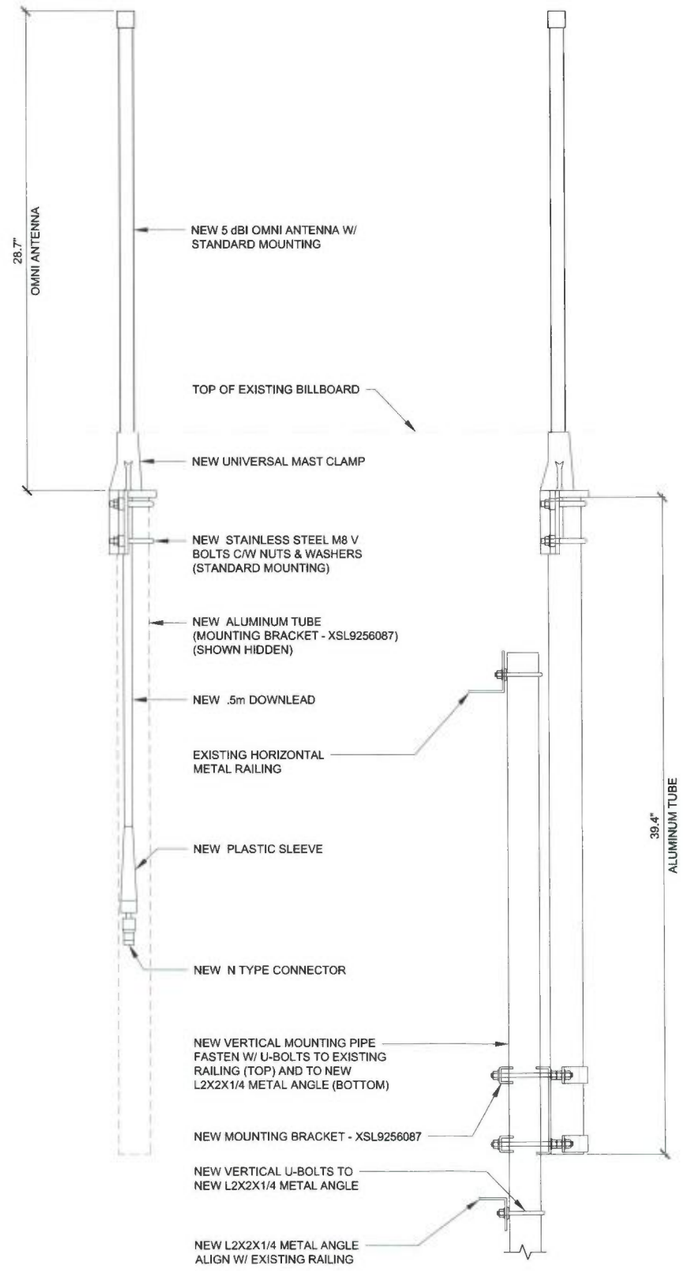

SIDE VIEW W/O MOUNTING BRACKET

SIDE VIEW

OMNI ANTENNA DETAIL

SCALE	
N.T.S.	2

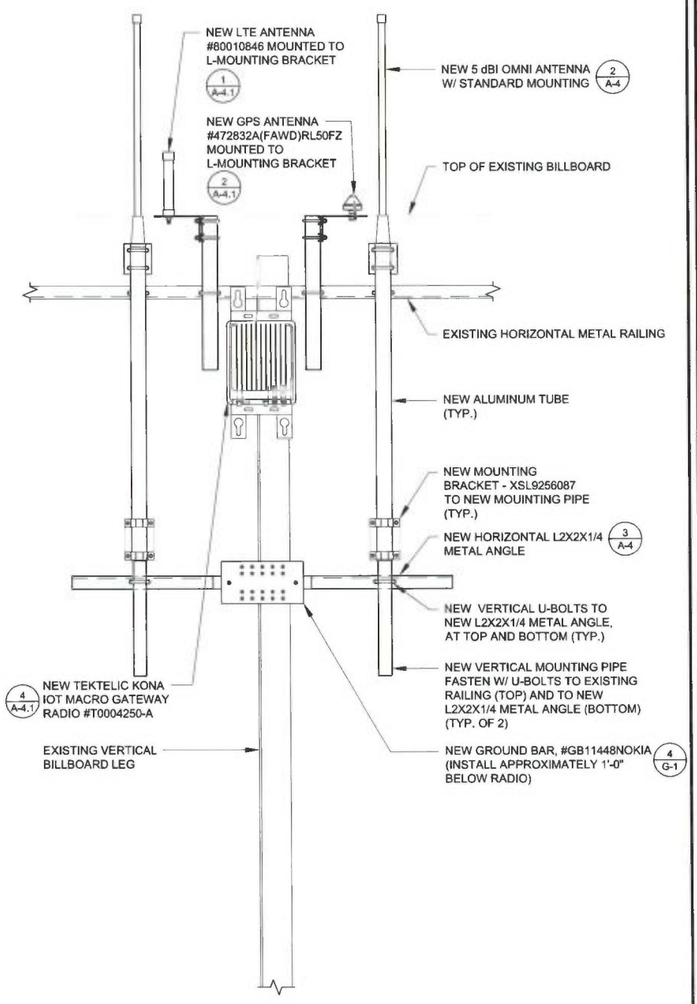

ANTENNA MAST CONFIGURATION

SCALE	
N.T.S.	1

ISSUE STATUS

REV.	DATE	DESCRIPTION	BY
A	05/08/17	90% CONSTRUCTION	EC
0	05/11/17	100% CONSTRUCTION	CM
1	05/17/17	100% CONSTRUCTION	AS

SAC WIRELESS
SAC AE DESIGN GROUP, INC.
5015 SHOREHAM PLACE, STE. 150
SAN DIEGO, CA 92122
www.sacw.com
619.736.3766

machineQ
A COMCAST SERVICE
COMCAST CENTER
1701 JFK BLVD, PHILADELPHIA, PA 19103

LICENSED ARCHITECT
ALEXANDER T. POPOWYCH
C-27456
RENEWAL 4-30-17
STATE OF CALIFORNIA
05-31-17
DATE:

PROJECT NAME:
SFO-CA-M-N-0000006-K16
2001 VAN NESS AVENUE
COMCAST NUMBER: SFO-CA-M-N-0000006-K16
OUTFRONTBB: 01121.000730.000730A
2001 VAN NESS AVENUE
SAN FRANCISCO, CA 94109

SHEET TITLE:
EQUIPMENT DETAILS & SPECIFICATIONS

A-4

NOT USED

SCALE N.T.S. | 6

RADIO DETAIL

TEKTELIC KONA IOT MACRO GATEWAY
T0004250-A

LENGTH:	8.74"
WIDTH:	3.9"
HEIGHT:	11.3"
WEIGHT	11.33 LBS

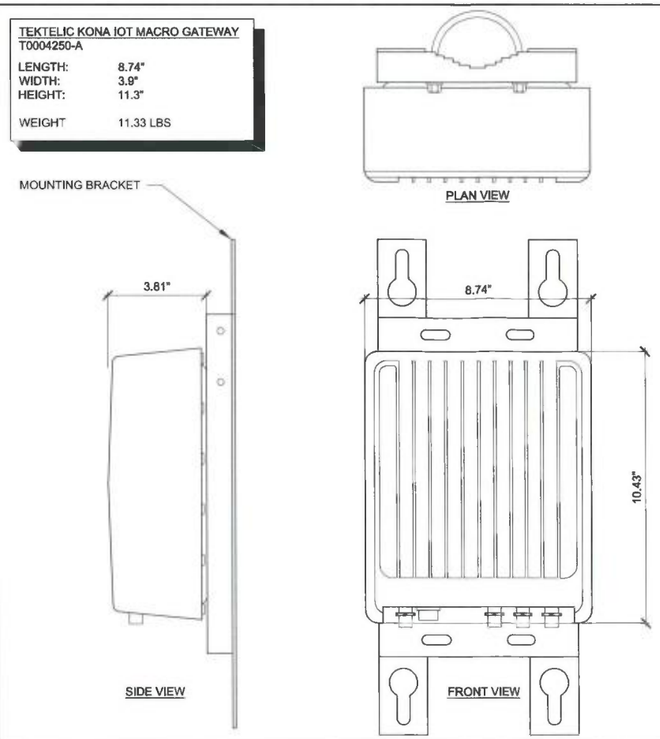

SCALE N.T.S. | 4

GPS ANTENNA

NOKIA
472832A(FAWD)RL50FZ

HEIGHT:	3.12"
DIAMETER:	2.36"
WEIGHT:	.31 LBS

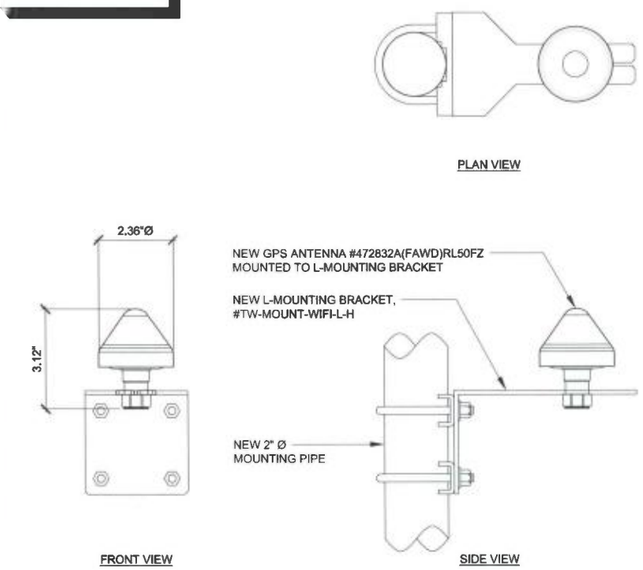

SCALE N.T.S. | 2

NOT USED

SCALE N.T.S. | 5

PoE DETAIL

MICROSEMI PoE 60 WATT OUTDOOR MIDSPAN
PD-9501GO

OUTDOOR MOUNTING BRACKET
PD-OUT / MBK

	MICROSEMI PD-9501GO	MOUNTING BRACKET PD-OUT / MBK
LENGTH:	5.90"	7.04"
WIDTH:	2.75"	1.16"
HEIGHT:	8.42"	9.41"
WEIGHT	1.65 LBS	3.53 LBS

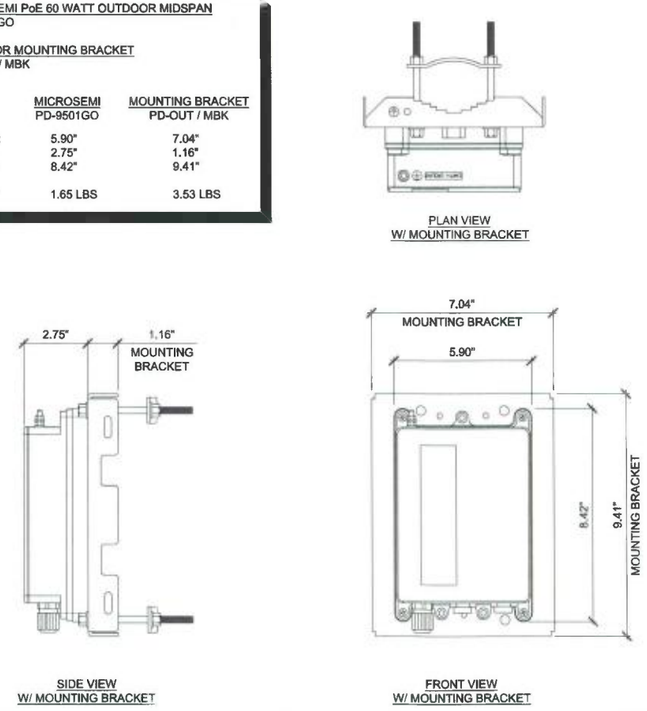

SCALE N.T.S. | 3

LTE ANTENNA

KATHREIN
80010846

HEIGHT:	8"
DIAMETER:	1.2"
WEIGHT:	.46 LBS

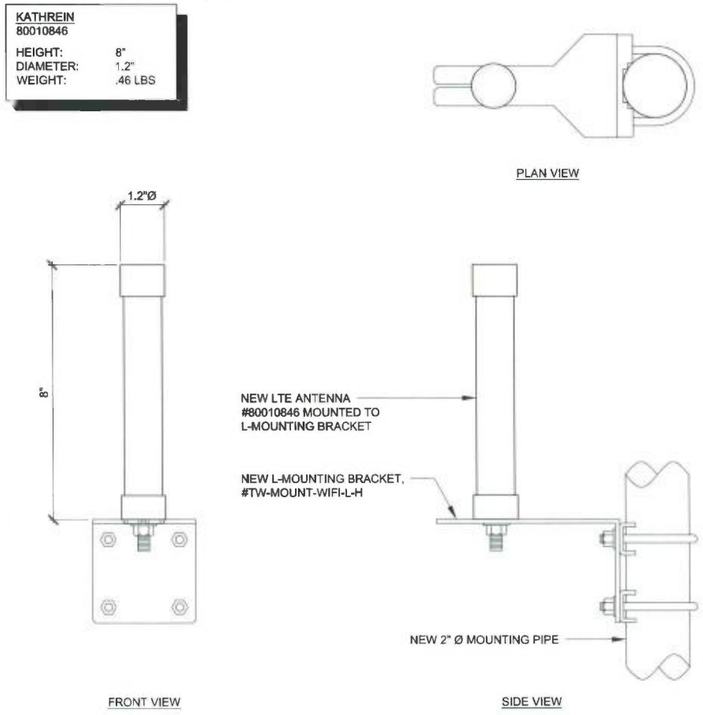

SCALE N.T.S. | 1

ISSUE STATUS

REV.	DATE	DESCRIPTION	BY
A	05/08/17	90% CONSTRUCTION	EC
0	05/11/17	100% CONSTRUCTION	CM
1	05/17/17	100% CONSTRUCTION	AS

SAC WIRELESS
SAC AE DESIGN GROUP, INC.
5015 SHOREHAM PLACE, STE. 150
SAN DIEGO, CA 92122
www.sacw.com
619.736.3766

machineQ
A COMCAST SERVICE
COMCAST CENTER
1701 JFK BLVD, PHILADELPHIA, PA 19103

LICENSED ARCHITECT
KRISTOF T. POPOWYCH
C-27490
RENEWAL 6-30-17
STATE OF CALIFORNIA
05-31-17
DATE:

PROJECT NAME:
SFO-CA-M-N-0000006-K16
2001 VAN NESS AVENUE

COMCAST NUMBER: SFO-CA-M-N-0000006-K16
OUTFRONTBB: 01121.000730.000730A

2001 VAN NESS AVENUE
SAN FRANCISCO, CA 94109

SHEET TITLE:
EQUIPMENT DETAILS & SPECIFICATIONS

A-4.1

NOT USED

SCALE N.T.S. 4

SYMBOLS & ABBREVIATIONS

SCALE N.T.S. 3

SYMBOLS

- GROUND ROD WITH ACCESS
- XIT GROUND ROD
- GROUND ROD
- DISCONNECT SWITCH
- UTILITY METER
- CIRCUIT BREAKER
- FUSE
- GENERATOR
- LIGHT SWITCH
- COMPRESSION, CLAMP, OR DOUBLE HOLE LUG TYPE GROUND CONNECTION
- EXOTHERMIC CONNECTION (CADWELD) TO GROUND RING AND COMPRESSION TO GROUND HALO
- G — GROUNDING WIRE, DASHED LINE INDICATES UNDERGROUND
- T — TELEPHONE LINE, DASHED LINE INDICATES UNDERGROUND
- C — COAXIAL CABLE, DASHED LINE INDICATES UNDERGROUND
- A — ANTENNA COAX
- 2/E3 — DETAIL REFERENCE DETAIL NO.2 ON SHEET E3

ABBREVIATIONS

ACCA	ANTENNA CABLE COVER ASSEMBLY
AWG	AMERICAN WIRE GAUGE
BTCW	BARE TINNED COPPER WIRE
C	CONDUIT
CIGBE	COAX INSULATED GROUND BAR EXTERNAL
CO	CONDUIT ONLY
DWG	DRAWING
EMT	ELECTRICAL METALLIC TUBING
NEW OR EX.	EXISTING
GEN	GENERATOR
GFI	GROUND FAULT CIRCUIT INTERRUPTER
GRND	GROUND
GPS	GLOBAL POSITIONING SYSTEM
GR	GROWTH
IGR	INTERIOR GROUND RING (HALO)
MIGB	MASTER ISOLATED GROUND BAR
(N)	NEW (PROVIDE AND INSTALL UNLESS NOTED OTHERWISE)
PCS	PERSONAL COMMUNICATION SERVICE
PDC	POWER PROTECTION CABINET
PRC	PRIMARY RADIO CABINET
PVC	POLYVINYL CHLORIDE CONDUIT
RGS	RIGID GALVANIZED STEEL
RWY	RACEWAY
S.L.D.	SINGLE LINE DIAGRAM
TMLP	VERIZON WIRELESS WIRELESS LIMITED PARTNERSHIP
TEL	TELEPHONE
TYP.	TYPICAL
WP	WEATHERPROOF EQUIPMENT

ELECTRICAL NOTES

SCALE N.T.S. 2

UTILITY GENERAL NOTES:

1. ALL NEW GROUNDINGS FOR ELECTRICAL ROUTE MUST BE DONE PER CEC, NEC & LOCAL BUILDING & SAFETY REQUIREMENTS.
2. ALL NEW CONDUIT FROM ELECTRICAL PANEL TO COMCAST RADIO MUST BE EMT (INDOOR) & RGS (OUTDOOR) CONDUITS. INSTALL WEATHERPROOF PULL BOXES AS REQD. PER CEC, NEC & LOCAL BLDG. & SAFETY REQUIREMENTS & MUST HAVE TRAFFIC COVERS.
3. ALL NEW PULL BOXES MUST BE HOT-DIPPED GALVANIZED AND WEATHERPROOF
4. ALL NEW WIRE SPLICES PULL BOXES DONE PER CEC & NEC.
5. FIELD VERIFY EXACT ELECTRICAL CONDUIT ROUTE.
6. COMCAST EQUIPMENT, OUTLET AND CONDUIT NEED TO BE LABELED & ALL CLEARANCE FOR ELECTRICAL EQUIPMENT BY CEC & NEC.
7. NEW GROUND RODS MAY BE USED FOR SITE GROUNDING IF DESIRED RESISTANCE IS ACHIEVED.
8. CONTRACTOR TO INSTALL UTILITY CONDUIT (LATERAL).
9. UTILITY POINTS OF SERVICE AND WORK / MATERIALS SHOWN ARE BASED UPON PRELIMINARY INFORMATION PROVIDED BY COMCAST CONSTRUCTION TEAM & COMCAST CONSTRUCTION MANAGER / AND OR LANDLORD'S MANAGEMENT COMPANY AND ARE FOR BID PURPOSES ONLY.
10. CONTRACTOR SHALL COORDINATE WITH COMCAST CONSTRUCTION TEAM & COMCAST CONSTRUCTION MANAGER / AND OR LANDLORD'S MANAGEMENT COMPANY FOR FINAL AND EXACT WORK / MATERIALS REQUIREMENTS AND CONSTRUCT. CONTRACTOR SHALL FURNISH AND INSTALL ALL CONDUITS, PULL ROPES, CABLES, PULL BOXES, CONCRETE ENCASEMENT OF CONDUIT (IF REQUIRED), TRANSFORMER PAD, BARRIERS, POLE RISERS, TRENCHING, BACKFILL, PAY ALL UTILITY COMPANY FEES AND INCLUDE ALL REQUIREMENTS IN SCOPE OF WORK.

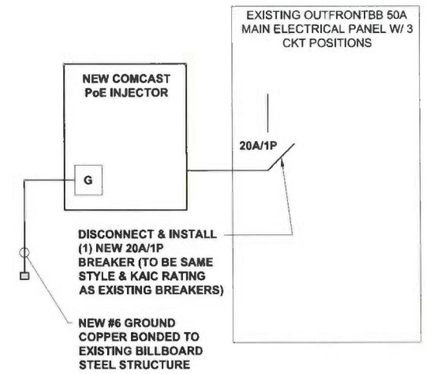

1-LINE DIAGRAM

SCALE N.T.S. 1

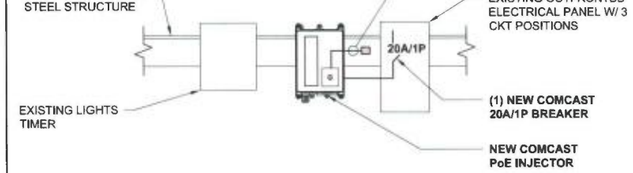

VIEW OF EXISTING OUTFRONTBB ELECTRICAL PANEL

ISSUE STATUS

REV.	DATE	DESCRIPTION	BY
A	05/08/17	90% CONSTRUCTION	EC
0	05/11/17	100% CONSTRUCTION	CM
1	05/17/17	100% CONSTRUCTION	AS

SAC WIRELESS
SAC AE DESIGN GROUP, INC.
5015 SHOREHAM PLACE, STE. 150
SAN DIEGO, CA 92122
www.sacw.com
619.736.3766

machineQ
A COMCAST SERVICE
COMCAST CENTER
1701 JFK BLVD, PHILADELPHIA, PA 19103

LICENSED ARCHITECT
LESTOR T. POPOWYCH
C-27846
RENEWAL 4-30-17
STATE OF CALIFORNIA
05-31-17
DATE:

PROJECT NAME:
SFO-CA-M-N-0000006-K16
2001 VAN NESS AVENUE

COMCAST NUMBER: SFO-CA-M-N-0000006-K16
OUTFRONTBB: 01121.000730.000730A

2001 VAN NESS AVENUE
SAN FRANCISCO, CA 94109

SHEET TITLE:
1-LINE DIAGRAM & NOTES

E-1

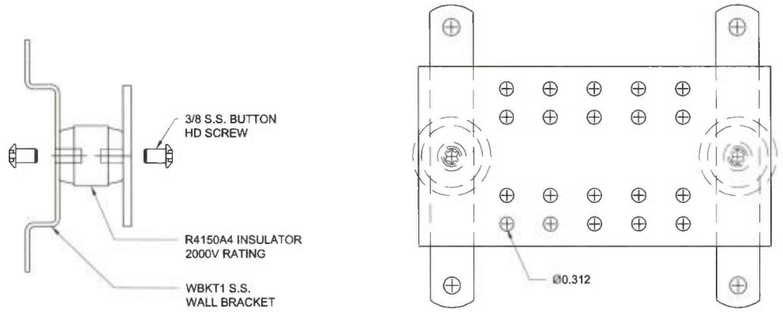

CONFIGURATION DESIGN

SCALE N.T.S. **4**

1. ALL DETAILS ARE SHOWN IN GENERAL TERMS. ACTUAL INSTALLATION AND CONSTRUCTION MAY VARY DUE TO SITE SPECIFIC CONDITIONS.
2. GROUND ALL ANTENNA BASES, FRAMES, CABLE RUNS, AND OTHER METALLIC COMPONENTS USING GROUND WIRES AND CONNECT TO SURFACE MOUNTED BUS BARS, FOLLOW ANTENNA AND BTS MANUFACTURES PRACTICES FOR GROUNDING REQUIREMENTS. GROUND COAX SHIELDS AT BOTH ENDS AND EXIT FROM TOWER OR POLE USING MFR'S PRACTICES.
3. ALL GROUND WIRE SHALL BE GREEN INSULATED WIRE ABOVE GROUND.
4. CONTRACTOR TO VERIFY AND TEST GROUND TO SOURCE. GROUNDING AND OTHER OPERATIONAL TESTING WILL BE WITNESSED BY A NOKIA REPRESENTATIVE.
5. REFER TO DIVISION 16 GENERAL ELECTRIC; GENERAL ELECTRICAL PROVISION AND COMPLY WITH ALL REQUIREMENTS OF GROUNDING STANDARDS.
6. CONTRACTOR TO ABIDE BY ALL NOKIA SAFETY STANDARDS DURING SITE CONSTRUCTION.
7. CONTRACTOR SHALL REFER TO NOKIA STANDARDS FOR GROUNDING CONNECTIONS & INSTALLATION METHODS.
8. ELECTRICAL CONTRACTOR TO PROVIDE DETAILED DESIGN OF GROUNDING SYSTEM, AND RECEIVE APPROVAL OF DESIGN BY AUTHORIZED NOKIA REPRESENTATIVE, PRIOR TO INSTALLATION OF GROUNDING SYSTEM. PHOTO DOCUMENT ALL CADWELDS AND GROUND RING.
9. NOTIFY CONSTRUCTION MANAGER IF THERE ARE ANY DIFFICULTIES INSTALLING GROUNDING SYSTEM DUE TO SITE SOIL CONDITIONS.
10. GROUNDING ROD NOTES (WHERE APPLICABLE)
11. ELECTRICAL CONTRACTOR SHALL ORDER GROUND RESISTANCE TESTING ONCE THE GROUND SYSTEM HAS BEEN INSTALLED; A QUALIFIED INDIVIDUAL. UTILIZING THE FALL OF POTENTIAL METHOD, SHOULD PERFORM THE TEST. THE REPORT WILL SHOW THE LOCATION OF THE TEST AND CONTAIN NO LESS THAN 9 TEST POINTS ALONG THE TESTING LINE, GRAPHED OUT TO SHOW THE PLATEAU.
12. POINT GROUND TEST OR 3 POINT 62% TESTS WILL NOT BE ACCEPTED AS ALTERNATIVES TO THE AFORE MENTIONED GROUND TESTS. TEST SHALL BE PERFORMED WHILE THE COUNTERPOISE IS ISOLATED. TEST SHALL BE PERFORMED WHILE THE COUNTERPOISE IS ISOLATED FROM THE A/C SYSTEM GRIDS AND EXISTING COMMUNICATIONS FACILITY.

GENERAL GROUNDING NOTES

SCALE N.T.S. **3**

1. THE DESIGN OF THE ANTENNA MAST CONFIGURATION CALLS FOR A TWO (2) INCH DIAMETER, 10-FOOT MAST WITH THE GROUND BAR AND ANTENNAS MOUNTED ON IT IN A SET RELATIONSHIP TO THE RADIO, AND GROUND BAR.
2. THE MAST, RADIOS AND ANTENNAS WOULD BE THE SAME NO MATTER WHAT TYPE SITE WAS SELECTED FOR THE INSTALLATION.
3. THE TEKTELIC GATEWAY/RADIO UNIT IS MOUNTED ON THE ANTENNA MAST AT ABOUT 24" TO 36" ABOVE THE BASE OF THE ROOFTOP OR AT MID SPAN ON SPECIFIC SITE TOWER.
4. THE HARGER GOUND BAR IS MOUNTED 12 INCHES BELOW THE RADIO TO PREVENT INDUCTION BUILD-UP DURING A LIGHTNING STRIKE. THE SURGE PROTECTORS FOR THE GPS, LTE, AND BOTH RF ANTENNAS ARE MOUNTED INTO THE ANTENNA PORTS ON THE BOTTOM OF THE RADIO.
5. THE RF JUMPERS ARE CONSTRUCTED WITH THE SURGE PROTECTORS BUILT IN. THE ENTIRE RF JUMPER IS FULLY WEATHER-PROOFED FROM CONNECTOR TO CONNECTOR. THEIR GROUND CABLES ARE CRIMPED TO THE GROUND RING OF THE SURGE PROTECTOR AT THE RADIO END, AND ARE ATTACHED TO THE HARGER GROUND BAR USING #10 AWG TWO (2) HOLE LUGS. THE GROUND CABLES ARE #10 AWG.
6. THE FOUR (4) ANTENNAS ARE MOUNTED ABOVE THE RADIO, WITH THE TWO RF ANTENNAS MOUNTED, WITH ONE (1) ON EACH SIDE OF THE MAST USING THE S200 COMMSCOPE 24" STAND-OFF BRACKETS.
7. THE LTE AND GPS ANTENNAS ARE MOUNTED ON THEIR RESPECTIVE MOUNTING BRACKETS AT A LOWER HEIGHT, APPROXIMATELY 2" TO 4" BELOW THE BOTTOM BAR OF THE S200 COMMSCOPE MOUNTING BRACKETS.
8. THE COAXIAL ANTENNA JUMPER CABLES ARE ATTACHED TO EACH OF THE ANTENNAS, WITH THE WEATHER PROOFING SLIDE-UP COVERS ATTACHED AS INSTRUCTED.
9. THE TEKTELIC RADIO IS GROUNDED TO THE HARGER GROUND BAR USING A TWO (2) HOLE #6 AWG LUG OFR CONNECTION TO THE RADIO AND A TWO-HOLE LUG FOR ATTACHMENT TO THE HARGER GOUND BAR.
10. THE HARGER GROUND BAR IS GROUNDED USING #6 AWG FLEX GROUND CABLE TO THE POINT OF LOWEST POTENTIAL ON THE TOWER OR DIRECTLY TO THE TOWER GROUND AT THE BASE OF THE TOWER.
11. FOR THE BILLBOARD, THE GROUND POINT SHOULD BE LOCATED AND VERIFIED BY SITE SURVEY AND THE GROUND CABLE ATTACHED AT THAT POINT.

CONFIGURATION NOTES

SCALE N.T.S. **2**

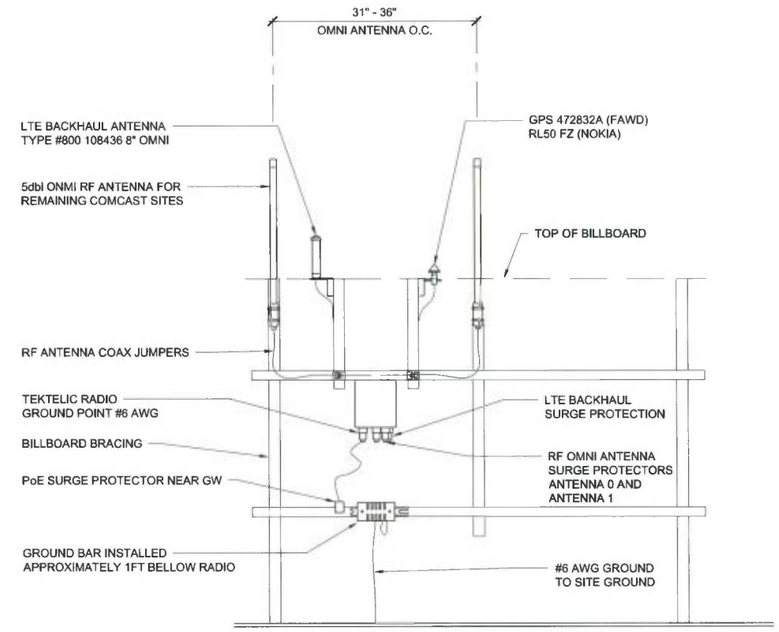

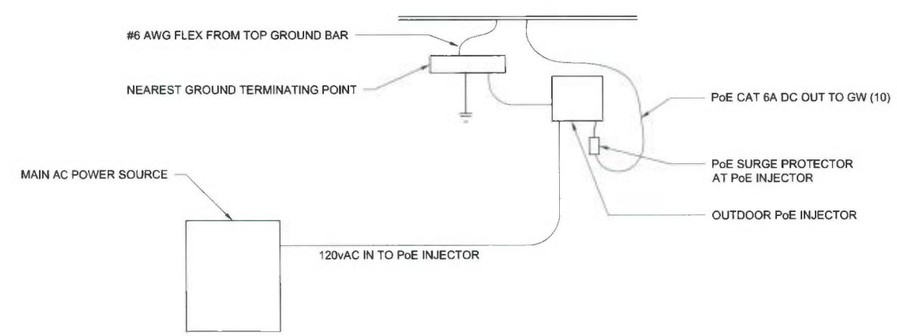

SCHEMATIC GROUNDING PLAN

SCALE N.T.S. **1**

ISSUE STATUS

REV.	DATE	DESCRIPTION	BY
A	05/08/17	90% CONSTRUCTION	EC
0	05/11/17	100% CONSTRUCTION	CM
1	05/17/17	100% CONSTRUCTION	AS

SAC WIRELESS
SAC AE DESIGN GROUP, INC.
5015 SHOREHAM PLACE, STE. 150
SAN DIEGO, CA 92122
www.sacw.com
619.736.3766

machineQ
A COMCAST SERVICE
COMCAST CENTER
1701 JFK BLVD, PHILADELPHIA, PA 19103

LICENSED ARCHITECT
STATE OF CALIFORNIA
05-31-17
DATE:

PROJECT NAME:
SFO-CA-M-N-0000006-K16
2001 VAN NESS AVENUE
COMCAST NUMBER: SFO-CA-M-N-0000006-K16
OUTFRONTBB: 01121.000730.000730A
2001 VAN NESS AVENUE
SAN FRANCISCO, CA 94109

SHEET TITLE:
SCHEMATIC GROUNDING PLAN & DETAILS

G-1